PRODUCT NUMBER

10075024–XXX–XXXLF

PLATING (AS AVAILABLE)
- S = 0.38µm GOLD ON CONTACT AREA 2µm MIN MATTE TIN ON TAIL
- G = 0.76µm GOLD ON CONTACT AREA 2µm MIN MATTE TIN ON TAIL
- F = GOLD FLASH ON CONTACT AREA 2µm MIN MATTE TIN ON TAIL
- 1.27µm MIN NICKEL UNDERPLATING

PIN STYLE, SEE TABLE (AS AVAILABLE)

OPTIONAL LETTER, SEE NOTE 7 (AS AVAILABLE)

POSITIONS PER ROW 02 TO 25

PACKAGING, SEE NOTE 5 (MAY BE SUBJECT TO TOOLING FEES)

LEAD FREE RoHS COMPATIBLE SEE NOTE 6

EXTENDED RANGE
- TOOLING FEASIBILITY CONFIRMED
- SAMPLES ON DEMAND
- AVAILABILITY ON DEMAND

PIN STYLE	DIM "A" ±0.25	DIM "B" ±0.20
01	4.00	2.00
02	6.90	2.00
03	5.80	2.00
04	6.00	3.00
05	5.70	2.30
06	2.00	3.00
07	4.00	2.50

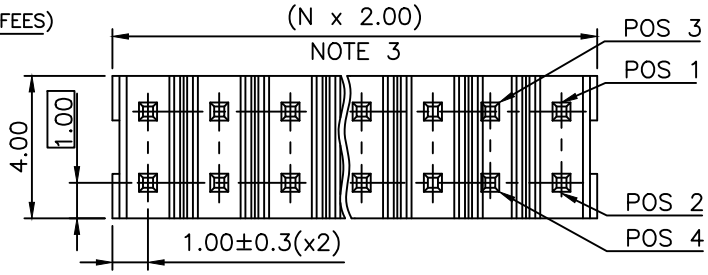

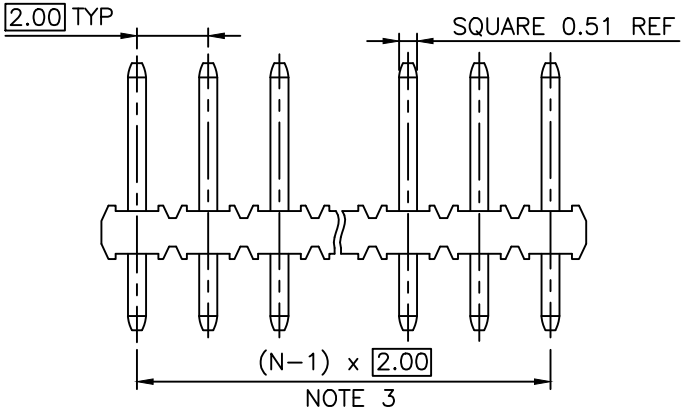

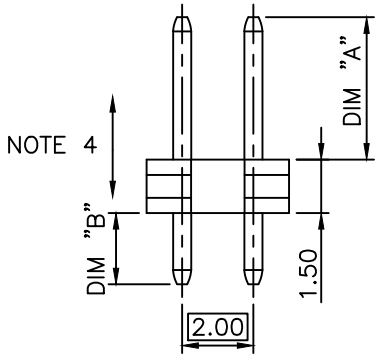

NOTES:
1 – MATERIAL HOUSING: HIGH TEMP. THERMOPLASTIC UL 94V–0, COLOR BLACK
2 – MATERIAL TERMINAL: COPPER ALLOY
3 – TO DETERMINE DIMENSIONS:
N = NUMBER OF POSITIONS PER ROW
4 – 7N MIN. PIN RETENTION IN EITHER DIRECTION.
5 – PACKAGING:
= STANDARD PACKAGING IN POLYBAG
U = TUBE WITHOUT PICK UP CAP AVAILABLE FROM 03 TO 25 POS PER ROW
P = TUBE WITH PICK UP CAP AVAILABLE FROM 03 TO 25 POS PER ROW
A = TAPE AND REEL WITH PICK UP CAP, AS AVAILABLE.
6 – RoHS COMPATIBLE PRODUCT SPECIFICATIONS
a – PLATING:
– "LF" MEANS THE PRODUCT IS LEAD–FREE, 2µm MINIMUM MATTE TIN OVER 1.27µm MINIMUM NICKEL UNDERPLATE.
b – MANUFACTURING PROCESS COMPATIBILITY
– THE HOUSING WILL WITHSTAND EXPOSURE TO 260°C PEAK TEMPERATURE FOR 30 SECONDS MAX IN A CONVECTION, INFRA–RED, OR VAPOR PHASE OR REFLOW OVEN
c – LABELLING:
– MEETS PACKAGING SPECS AS PER GS–14–920
d – LEGAL STATEMENT : SEE GS–47–0004
7 – OPTIONAL LETTER:
FOR FULL LOADED PRODUCT USE –
FOR POLARIZED VERSIONS, SEE TABLE
8 – THIS PART SERIES IS NOT INITIALLY INTENDED FOR AUTOMOTIVE APPLICATIONS. ADDITIONAL FEES ARE CHARGEABLE FOR ANY ADDITIONAL QUALIFICATION AND TEST REPORTS PERFORMED OUTSIDE THE SCOPE OF THE STANDARD PRODUCT SPECIFICATIONS.
9 – UNLESS OTHERWISE APPROVED BY AMPHENOL, ALL PARTS AND COMPONENTS ARE DESIGNED & BUILT ACCORDING TO AMPHENOL'S SPECIFICATIONS WHICH ARE SUBJECT TO CHANGE WITHOUT NOTICE.

OPTIONAL LETTER FOR POLARIZED VERSION	MISSING PIN POSITION
A	20
B	9

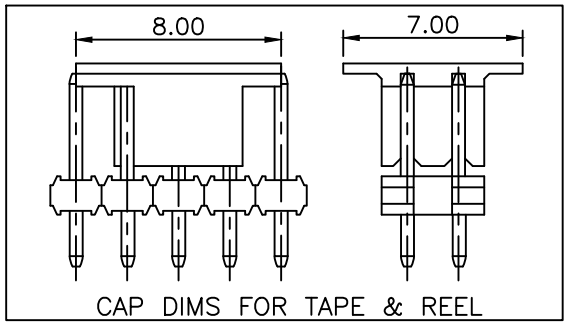

CAP DIMS FOR TAPE & REEL

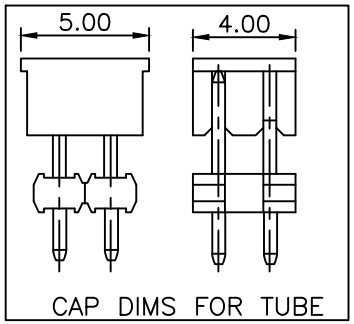

CAP DIMS FOR TUBE

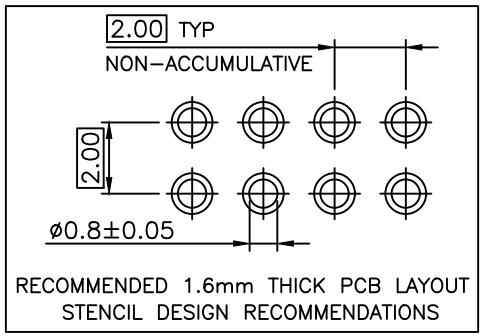

RECOMMENDED 1.6mm THICK PCB LAYOUT STENCIL DESIGN RECOMMENDATIONS

ltr	ecn no	dr	date
H	B–19797	AMA	14.12.16
J	F–23051	AMA	16.01.15
K	F–26013	DDE	17.02.02
L	F–27930	DDE	17.09.11
M	F–47179	DDE	23.02.02
N	F–55042	DDE	25.01.30

mat'l. code

surface ISO 1302 ✓ | tolerance ISO 406 ISO 1101 | projection

tolerances unless otherwise specified: angles | linear .x ±0.3, .xx ±0.15, .xxx ±0.05 | mm | scale 5:1

dr	L MULIN	07.01.04
engr	J.COMPAGNON	07.01.04
chr		
appd	J.COMPAGNON	07.01.04

sheet index | revision sheet

product family: MINITEK

title: UNSHR.HEADER 2.00 mm VERTICAL PIP

dwg no: 10075024 | sheet 1 of 1 | size A3

type: CUSTOMER Drawing

Amphenol FCi

Amphenol FCi FCIconnect.com
Copyright FCI