CABLINE®-CA II

Fully-shielded with mechanical lock, suitable for high-data-rate transfer (32 Gbps/lane), 0.4 mm pitch, horizontal mating type micro-coaxial connector

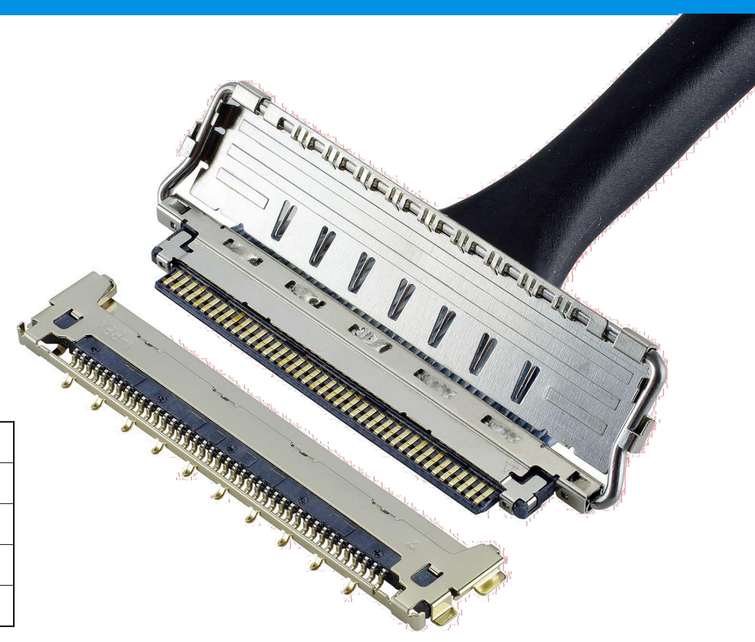

Product Specifications:

Mating type		Horizontal
Board Pitch (mm)		0.4
Wiping Length (mm)		0.54
Mated size (mm)	Height	1.1 max. with cover
	Width	Formula: 6.95 + (0.4*?p)
	Depth	6.2
Pin Counts	Range	Up to 60
	Available	20, 30, 40, 50

* Please inquire for pin counts not listed or outside of the pin count range.
* 60p is also available with CABLINE®-CA II PLUS (wider space type).

Applicable Cable Size:

Maximum O.D. (mm)	0.4
Micro-Coaxial for Signal (AWG)	45 ohm: #38 or smaller
	50 ohm: #40 or smaller
Twinaxial (AWG)	#40, #42
Discrete (AWG)	#34 or smaller

Applicable Standards (Reference Only):

32 Gbps/ Lane, USB4 Gen4 (40 Gbps/ Lane PAM3)
Display Port UHBR20 (20 Gbps/Lane),

ZenShield® fully-shielded with multi-point grounds is ideal for EMC solutions

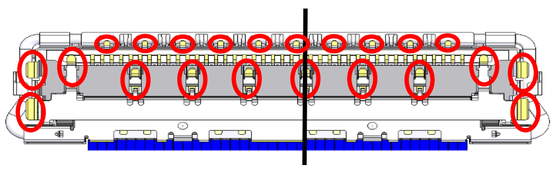

View From Back

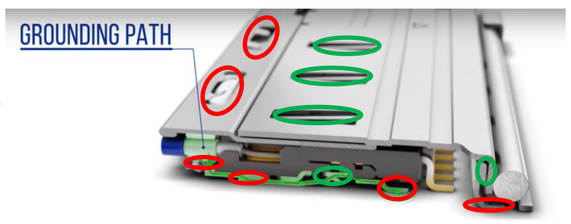

Soldered contacts
Mechanical contacts

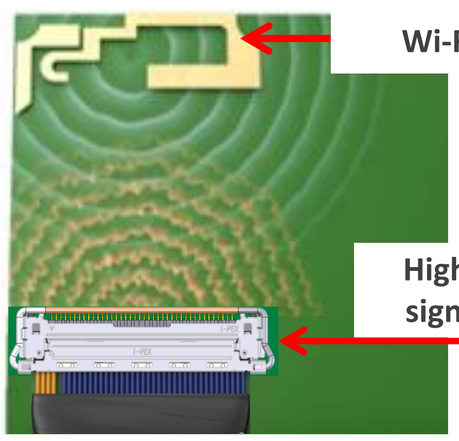

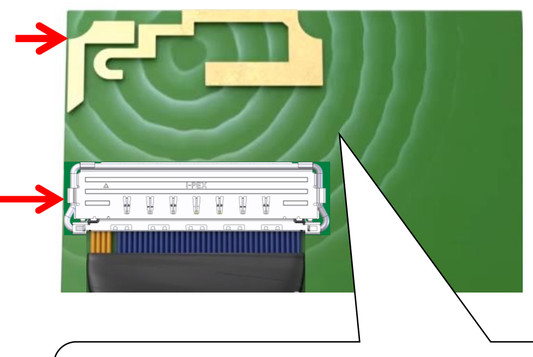

Connectors can be placed closer to antenna

Mechanical locking cover prevents incomplete mating and back-out/unmating

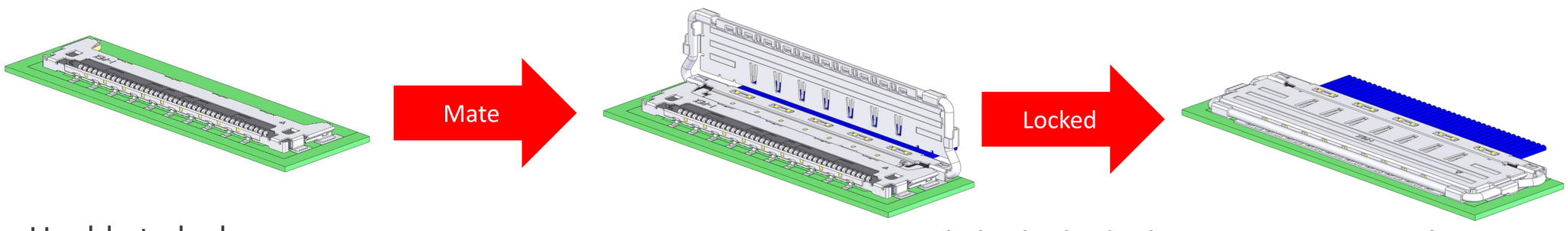

Unable to lock

can only be locked when mating is complete

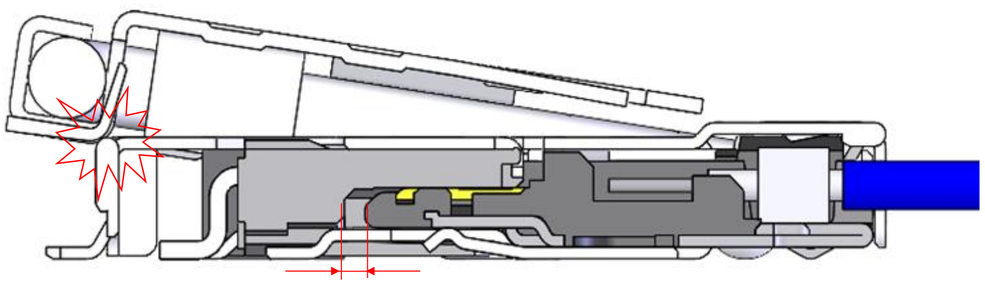

incomplete mating

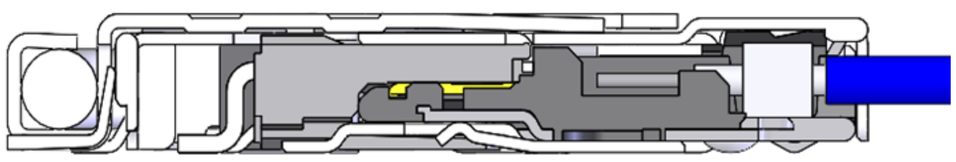

complete mating

High-data-rate transfer, ideal for 32 Gbps/lane applications

Measurement results

Connector: CABLINE-CA II 40P

Cable: Micro-coaxial cable
AWG #40, 45ohm , Length : 100 mm

Pin Assignment: GSSGSSG

Return Loss (SDD11)

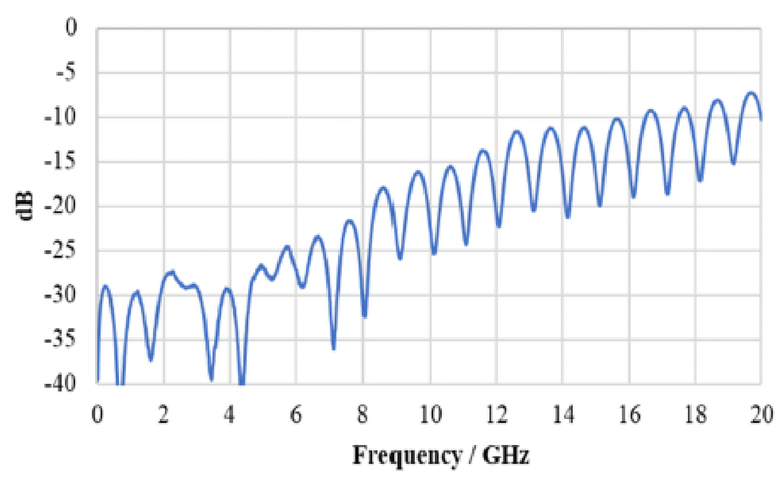

Insertion Loss (SDD21)

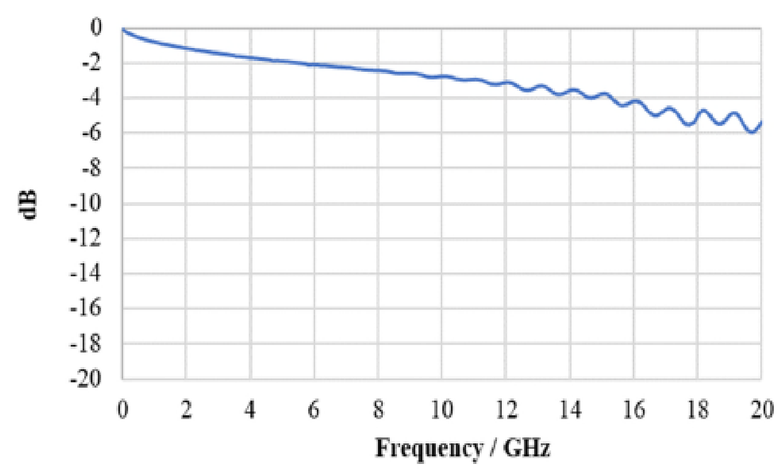

Component Parts Details

Component Parts

Connector parts	Plug parts
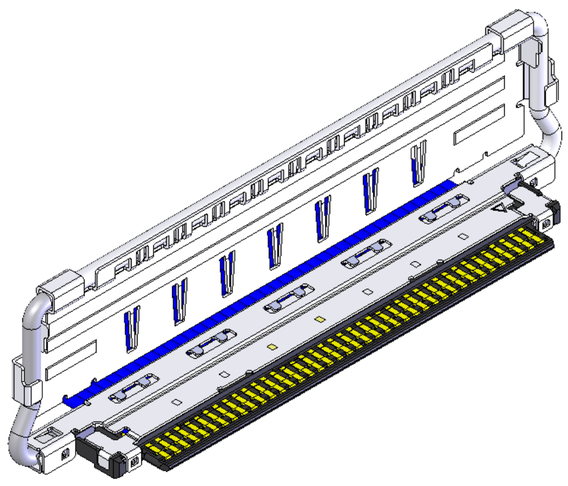 PLUG	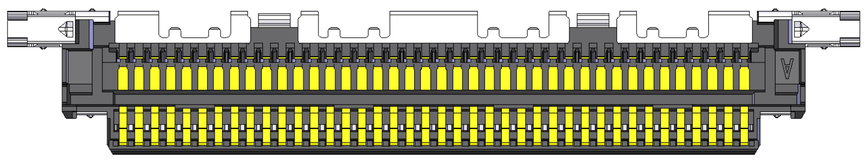 PLUG HOUSING ASSEMBLY
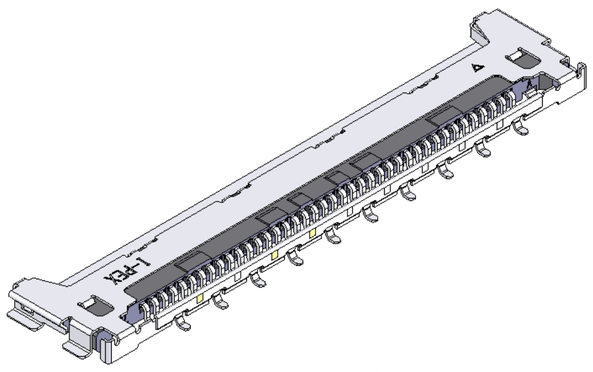 RECEPTACLE	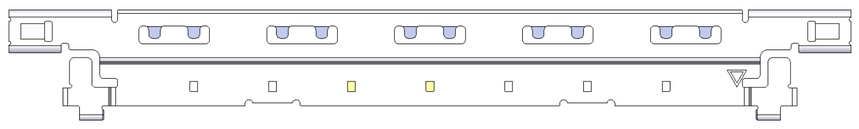 PLUG SHELL-A
	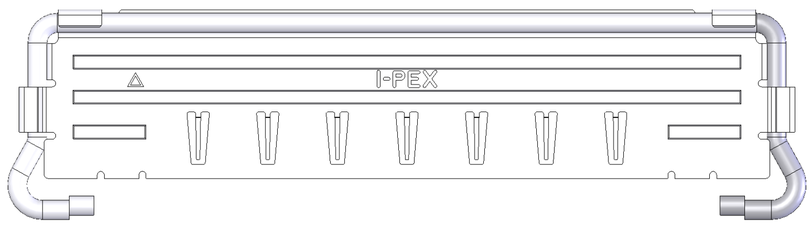 PLUG LOCK BAR ASSEMBLY

Plug for Cable Assembly

Recommended P/N	20679-0**T-01					
PART NO.	Pos.	A	B	C	D	E
20679-020T-01	20	7.60	8.40	10.66	13.40	14.95
20679-030T-01	30	11.60	12.40	14.66	17.40	18.95
20679-040T-01	40	15.60	16.40	18.66	21.40	22.95
20679-050T-01	50	19.60	20.40	22.66	25.40	26.95

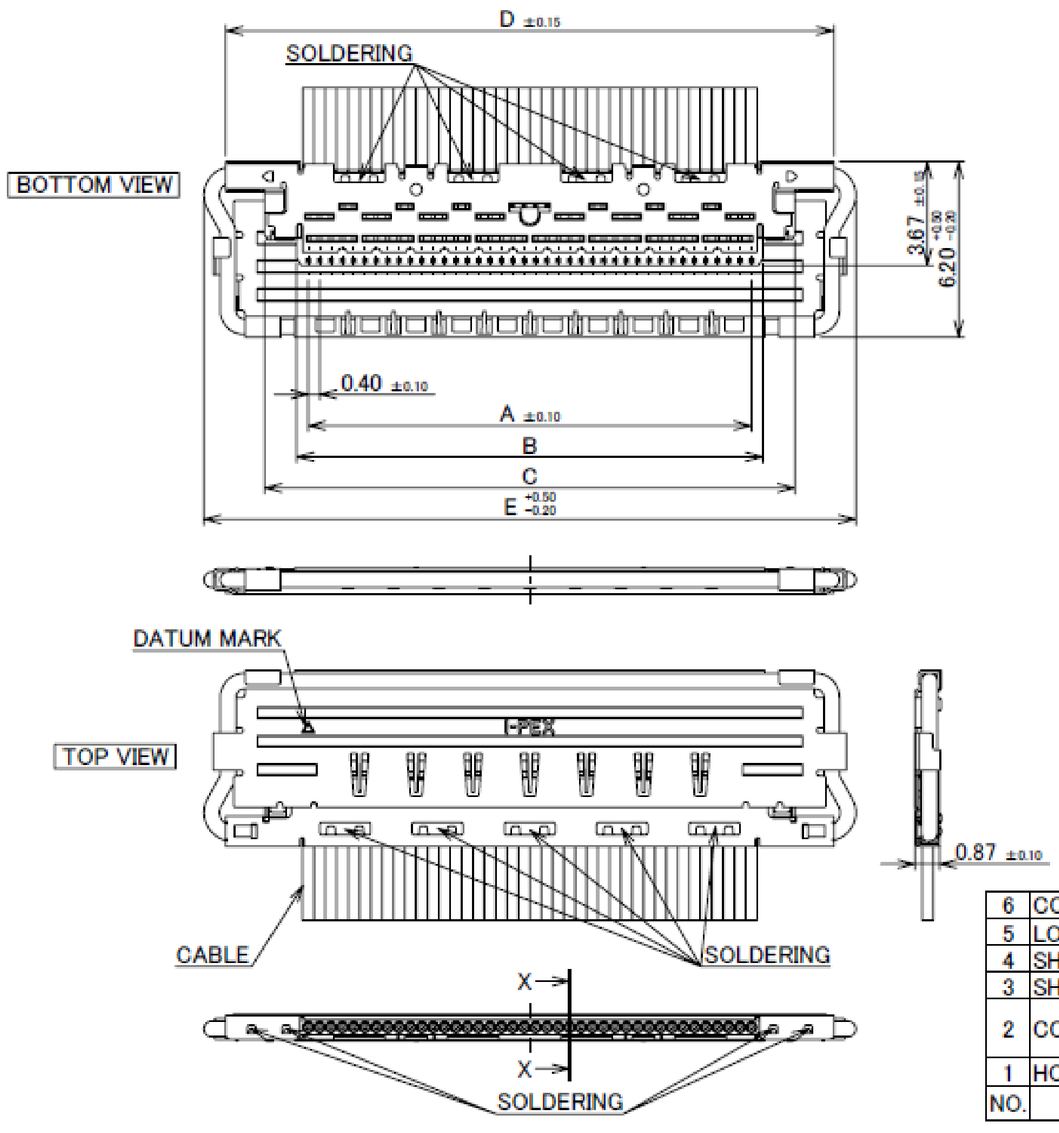

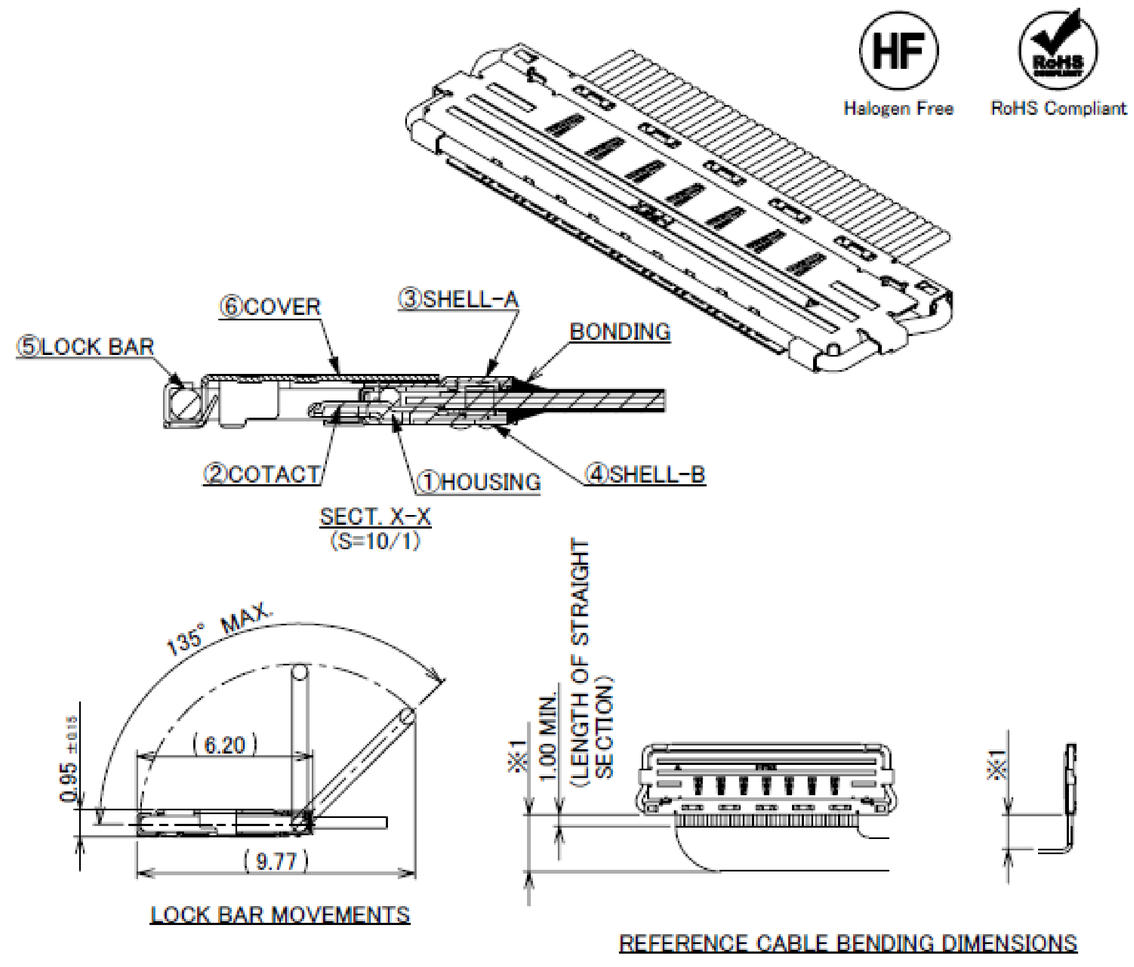

※1 : THE BEND DIMENSIONS MAY VARY BASED ON THE SIZE AND QUANTITY OF CABLES.
PLEASE CONFIRM THE MINIMUM BENDING RADIUS WITH I-PEX OR THE HARNESS MANUFACTURER.

NO.	DISCRIPTION	MATERIAL	FINISH , REMARKS
6	COVER	PHOSPHOR BRONZE	ALL OVER Ni 1.00 μm MIN.
5	LOCK BAR	SUS	–
4	SHELL-B	PHOSPHOR BRONZE	PARTIAL Au 0.003 μm MIN. OVER Ni 1.00 μm MIN.
3	SHELL-A	PHOSPHOR BRONZE	PARTIAL Au 0.003 μm MIN. OVER Ni 1.00 μm MIN.
2	CONTACT	PHOSPHOR BRONZE	ALL OVER Ni 1.00 μm MIN. CONTACT & SOLDERING AREA : Au 0.03 μm MIN.
1	HOUSING	LCP	UL94V-0 ,BLACK

Rev.14

PART NO.	Pos.	A
20679-020T-01	20	7.60
20679-030T-01	30	11.60
20679-040T-01	40	15.60
20679-050T-01	50	19.60

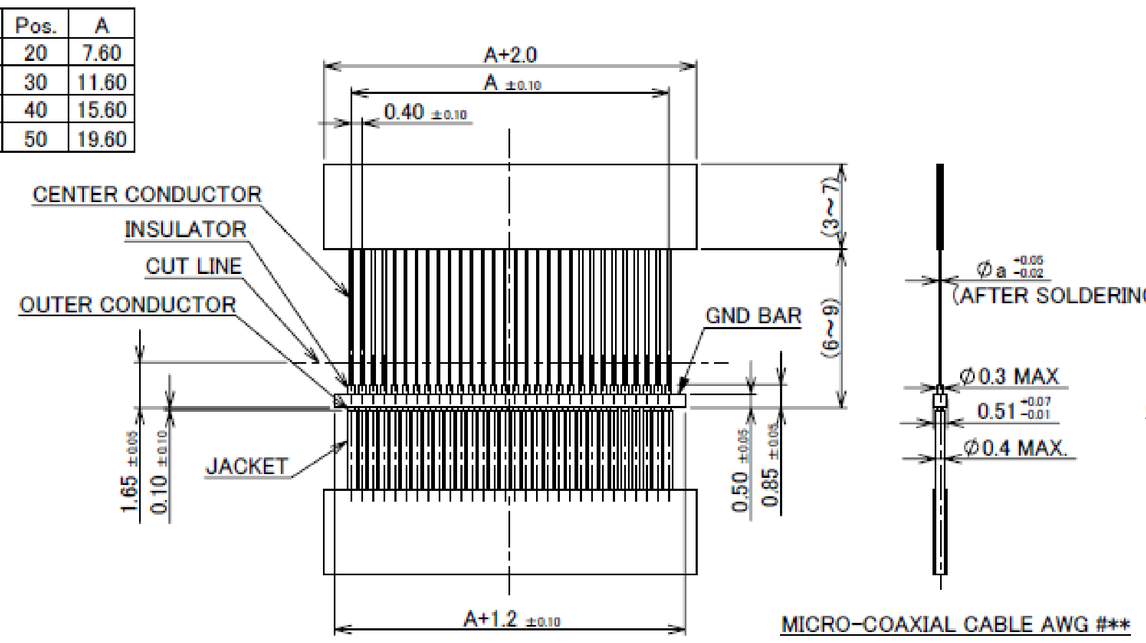

RECOMMENDED MICRO-COAXIAL CABLE DIM.

MICRO-COAXIAL CABLE AWG #**

CHARACTERISTIC IMPEDANCE MATCHING MICRO-COAXIAL CABLE

	a
#38	0.12
#40	0.09
#42	0.075
#44	0.063

CHARACTERISTIC IMPEDANCE UN-MATCHING MICRO-COAXIAL CABLE

	a
#36	0.15

MICRO-COAXIAL CABLE #36 : NOT RECOMMENDED FOR HIGH SPEED SIGNAL TRANSFER

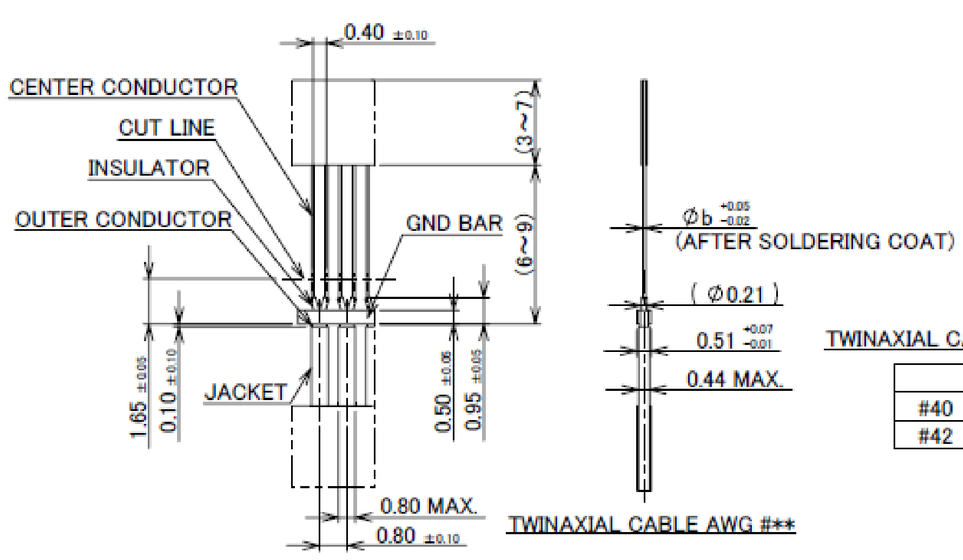

RECOMMENDED TWINAXIAL CABLE DIM.

TWINAXIAL CABLE AWG #**

TWINAXIAL CABLE DIMENSION

	b
#40	0.09
#42	0.075

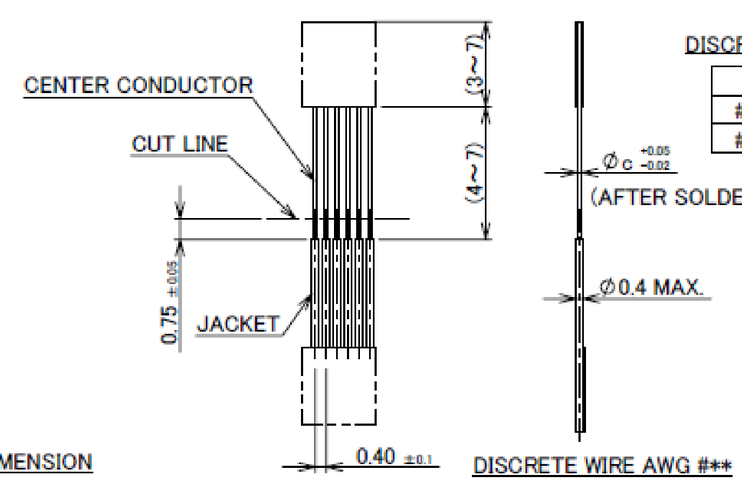

RECOMMENDED DISCRETE WIRE DIM.

DISCRETE WIRE AWG #**

DISCRETE WIRE DIMENSION

	c
#34	0.192
#36	0.15

Rev.14

Plug for Cable Assembly

ITEMS	SPECIFICATION
APPLICABLE CABLE	MICRO-COAXIAL CABLE : AWG #44 , 42 , 40 , 38 , 36 DISCRETE WIRE : AWG #36 , 34 TWINAXIAL CABLE : AWG #40 , 42
RATED VOLTAGE	100V AC (PER CONTACT PIN) ※THIS IS THE RATED VOLTAGE OF THE CONNECTOR. PLEASE NOTE THAT THE RATED VOLTAGE MAY VARY IN THE HARNESS DEPENDING ON THE CABLES USED.
RATED AMPERAGE (FOR CONTACT)	0.1A AC/DC [AWG #44] PER CONTACT PIN/UP TO 50 CONTACTS 0.24A AC/DC [AWG #42] PER CONTACT PIN/UP TO 50 CONTACTS 0.3A AC/DC [AWG #40] PER CONTACT PIN/UP TO 50 CONTACTS 0.5A AC/DC [AWG #38] PER CONTACT PIN/UP TO 18 CONTACTS 0.8A AC/DC [AWG #36] PER CONTACT PIN/UP TO 6 CONTACTS 1.0A AC/DC [AWG #34] PER CONTACT PIN/UP TO 6 CONTACTS ※TESTING BY A REAL MACHINE IS RECOMMENDED BECAUSE TEMPERATURE RISE MAY AFFECTED BY ACTUAL SITUATION
OPERATING TEMPERATURE	248 TO 378K(-40℃ TO 105℃)
OPERATING HUMIDITY	85% MAX.
CONTACT RESISTANCE	INITIAL : 180mohm MAX.(AWG #34) / AFTER TEST : ⊿40mohm MAX. 275mohm MAX.(AWG #36) 360mohm MAX.(AWG #38) 600mohm MAX.(AWG #40) 700mohm MAX.(AWG #42) 1080mohm MAX.(AWG #44)
GROUND SHELL RESISTANCE	INITIAL : 50mohm MAX. / AFTER TEST : ⊿40mohm MAX.
INSULATION RESISTANCE	INITIAL : 1000Mohm MIN. / AFTER TEST : 500Mohm MIN.
DIELECTRIC WITHSTANDING VOLTAGE	AC250V 1min
DURABILITY	30 CYCLES
MATING FORCE (INITIAL / AFTER 30 CYCLES)	20P : 9.70N MAX. 30P : 14.55N MAX. 40P : 19.40N MAX. 50P : 24.25N MAX.
UN-MATING FORCE (INITIAL / AFTER 30 CYCLES)	20P : 2.0N MIN. 30P : 3.0N MIN. 40P : 4.0N MIN. 50P : 5.0N MIN.
CABLE RETENTION FORCE	20P : 9.80N MIN. 30P : 14.70N MIN. 40P : 19.60N MIN. 50P : 24.50N MIN.
PRODUCT SPECIFICATION	PRS-2163
TEST REPORT	TR-15103
INSTRUCTION MANUAL	HIM-15033
ASSEMBLY MANUAL	ASM-15005
APPEARANCE CRITERIA NO.	QLS-A***

Rev.14

Plug Housing Assembly

Recommended P/N	20680-0**T-01									
PART NO.	Pos.	A	B	C	D	E	F	G	H	J
20680-020T-01	20	9.10	8.65	8.30	7.60	8.40	10.66	13.40	–	5.00
20680-030T-01	30	13.10	12.65	12.30	11.60	12.40	14.66	17.40	4.00	8.00
20680-040T-01	40	17.10	16.65	16.30	15.60	16.40	18.66	21.40	8.00	12.00
20680-050T-01	50	21.10	20.65	20.30	19.60	20.40	22.66	25.40	12.00	16.00
20680-060T-01	60	25.10	24.65	24.30	23.60	24.40	26.66	29.40	16.00	20.00

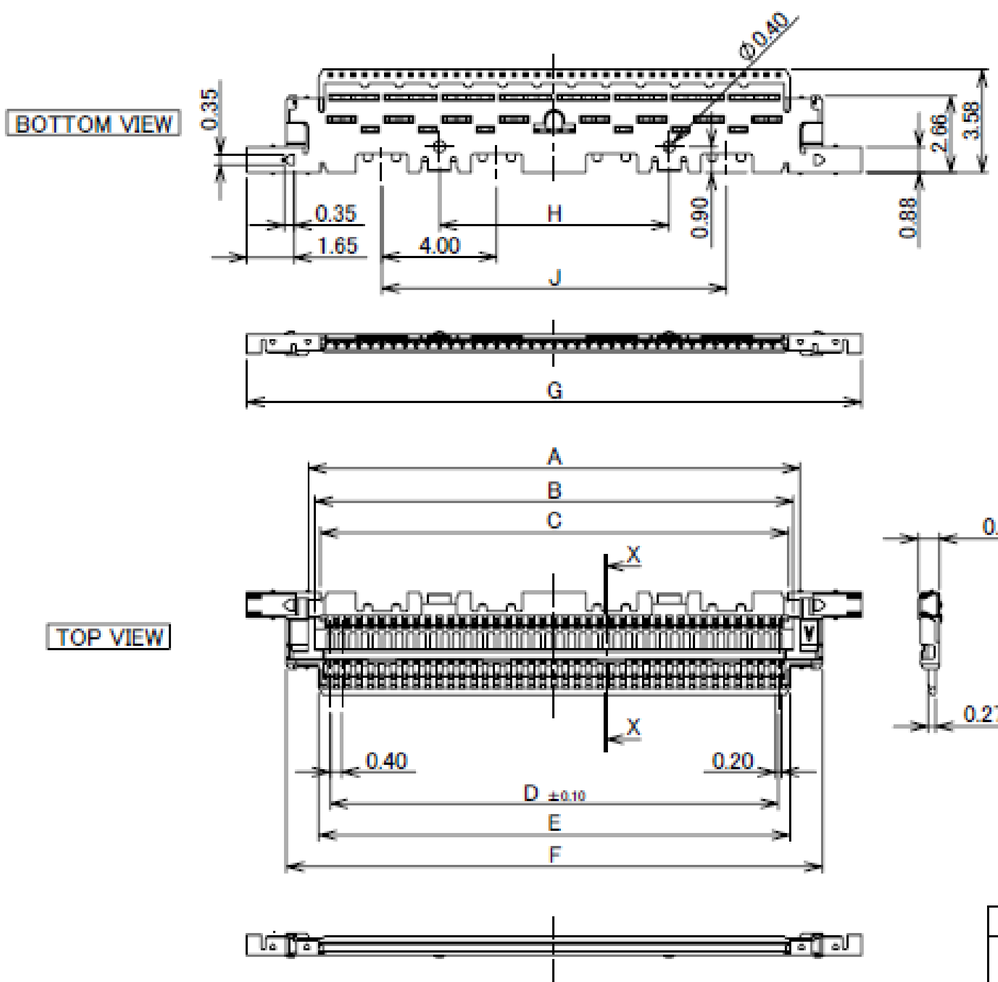

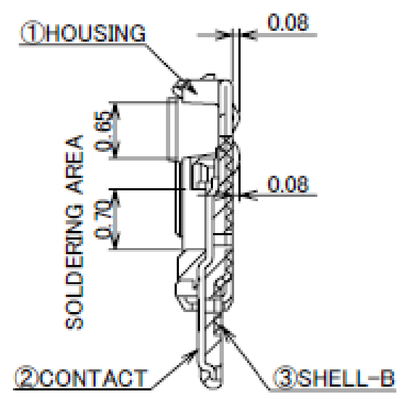

SECT. X-X
(S=15/1)

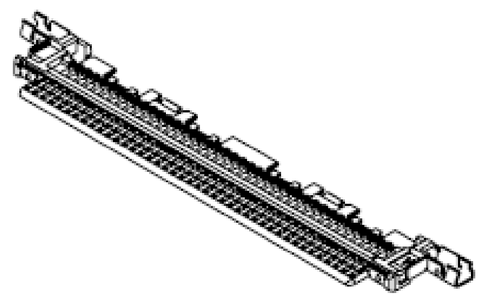

NOTES.
1. THIS PART IS ASSEMBLED WITH SHELL A(P/N 3204-0**1) AND LOCK BAR ASS'Y(P/N 20681-0**T-01) AFTER SOLDERED THE CABLE, AND IT BECOMES P/N 20679-0**T-01
2. THIS PART IS ASSEMBLED WITH SHELL A(P/N 3204-0**1) AND LOCK BAR ASS'Y(P/N 20789-0**T-01) AFTER SOLDERED THE CABLE, AND IT BECOMES P/N 20788-0**T-01

NO.	DISCRIPTION	MATERIAL	FINISH , REMARKS
3	SHELL-B	PHOSPHOR BRONZE	PARTIAL Au 0.003 μm MIN. OVER Ni 1.00 μm MIN.
2	CONTACT	PHOSPHOR BRONZE	ALL OVER Ni 1.00 μm MIN. CONTACT & SOLDERING AREA : Au 0.03 μm MIN.
1	HOUSING	LCP	UL94V-0 ,BLACK

Rev.7

Plug Shell-A

Recommended P/N	3204-0**1					
PART NO.	Pos.	A	B	C	D	E
3204-0201	20	13.40	7.88	10.66	2.50	5.00
3204-0301	30	17.40	11.88	14.66	3.00	9.00
3204-0401	40	21.40	15.88	18.66	3.25	13.00
3204-0501	50	25.40	19.88	22.66	3.40	17.00
3204-0601	60	29.40	23.88	26.66	4.00	20.00

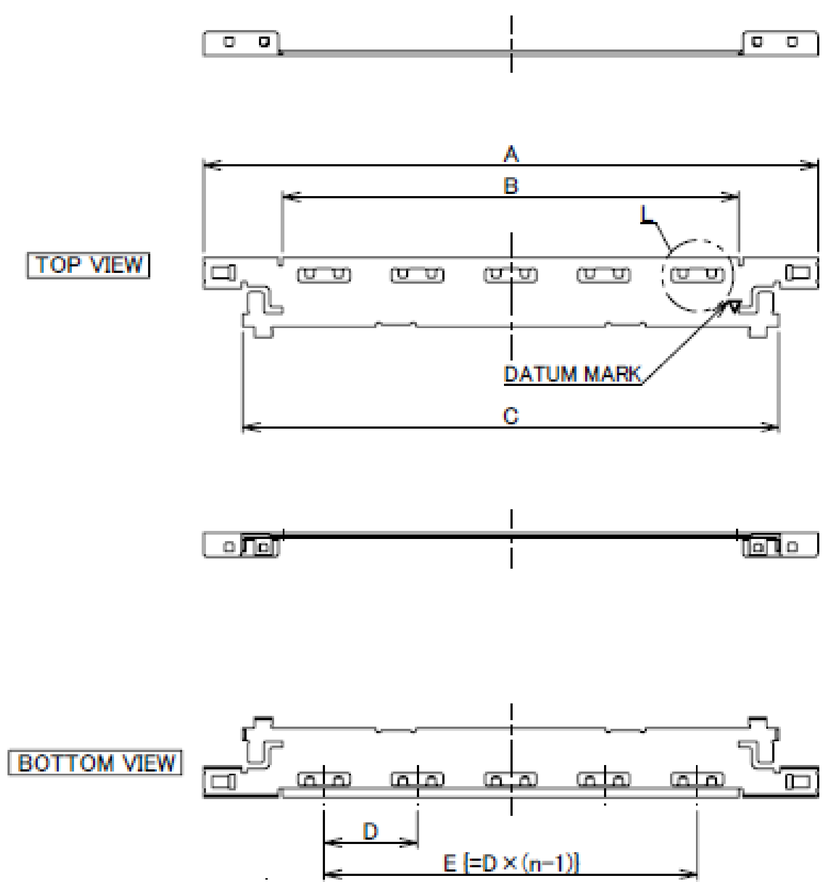

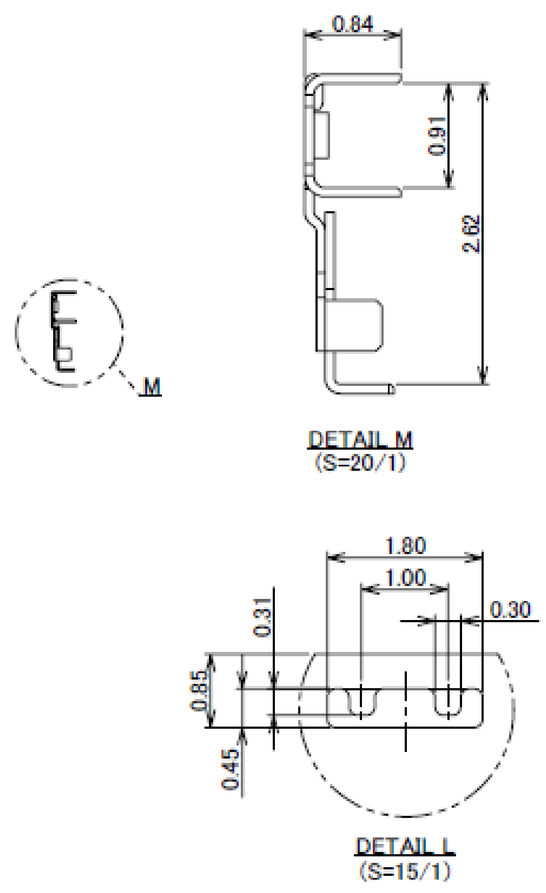

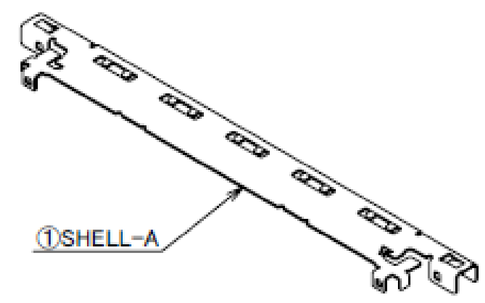

1	SHELL-A	PHOSPHOR BRONZE	PARTIAL Au 0.003 μm MIN. OVER Ni 1.00 μm MIN.
NO.	DISCRIPTION	MATERIAL	FINISH , REMARKS

Rev.7

Lock Bar Assembly

Recommended P/N	20681-0**T-01			
PART NO.	Pos.	A	B	C
20681-020T-01	20	12.65	13.85	4.00
20681-030T-01	30	16.65	17.85	8.00
20681-040T-01	40	20.65	21.85	12.00
20681-050T-01	50	24.65	25.85	16.00

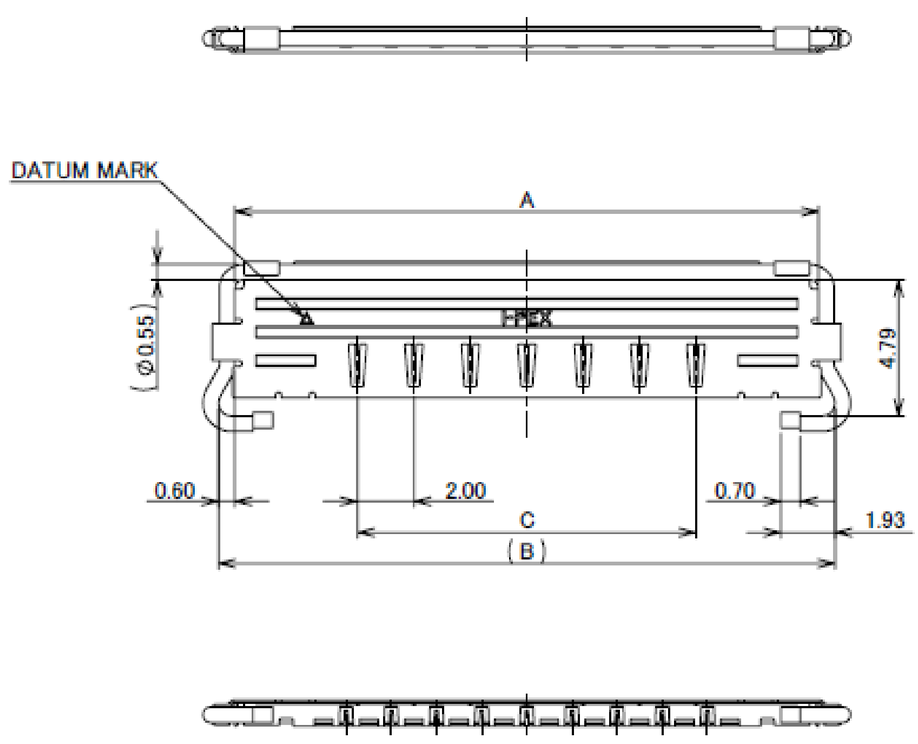

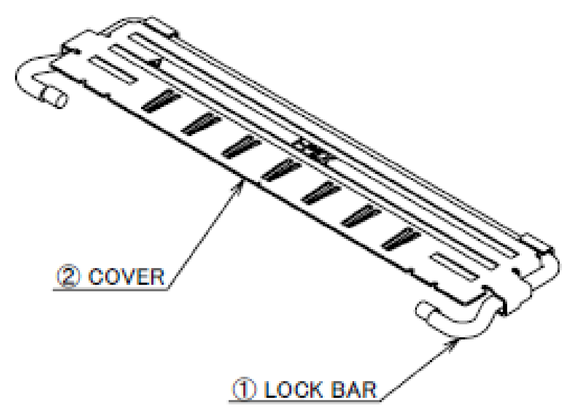

2	COVER	PHOSPHOR BRONZE	ALL OVER Ni 1.00 μm MIN.
1	LOCK BAR	SUS φ0.55	–
NO.	DISCRIPTION	MATERIAL	FINISH , REMARKS

Rev.5

Receptacle Assembly

Recommended P/N	20682-0**E-02									
PART NO.	Pos.	A	B	C	D	E	J	K	L	U
20682-020E-02	20	9.40	7.60	12.43	13.20	4.80	2.40	5.60	2.00	10.01
20682-030E-02	30	13.40	11.60	16.43	17.20	9.60	2.40	12.00	1.60	14.01
20682-040E-02	40	17.40	15.60	20.43	21.20	12.00	2.40	14.40	1.60	18.01
20682-050E-02	50	21.40	19.60	24.43	25.20	16.80	2.80	18.40	1.60	22.01

P/N : 20682-0 ** E- 02
Pos.

Halogen Free RoHS Compliant

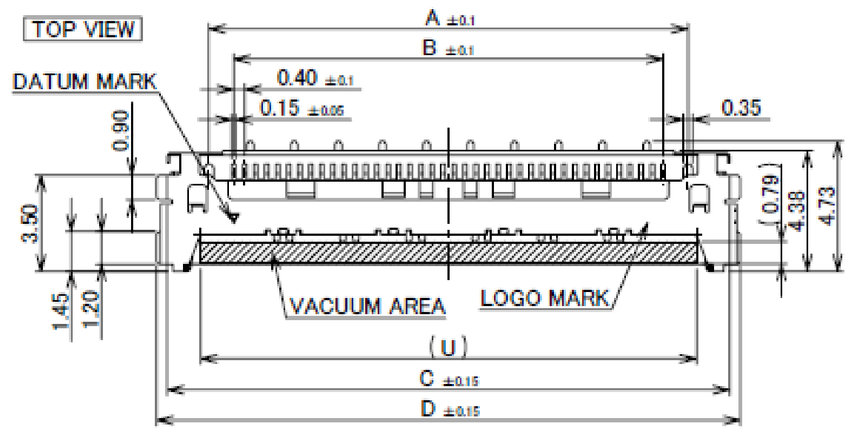

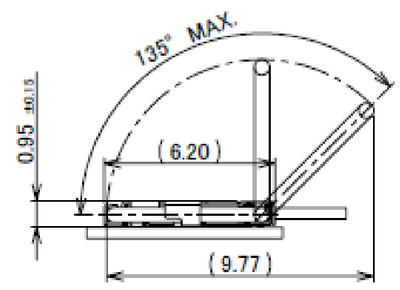

LOCK BAR MOVEMENTS

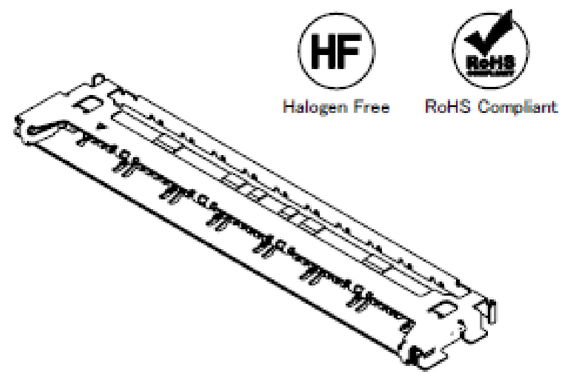

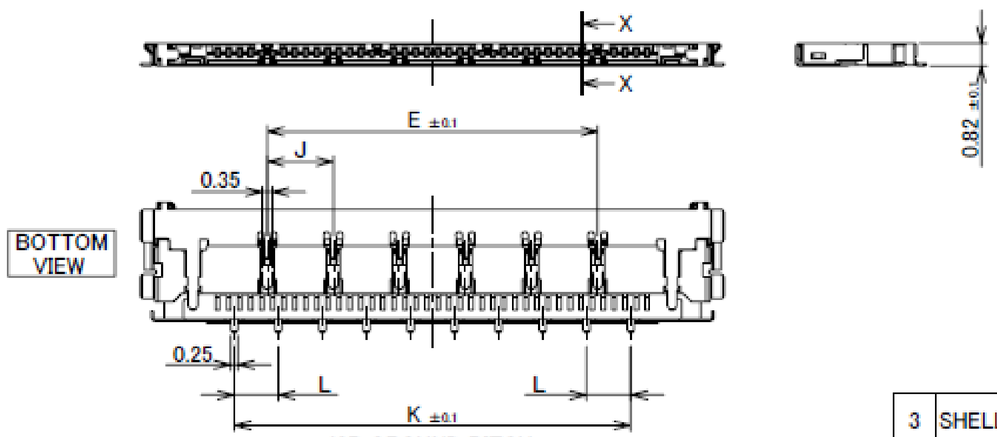

40P GROUND PITCH

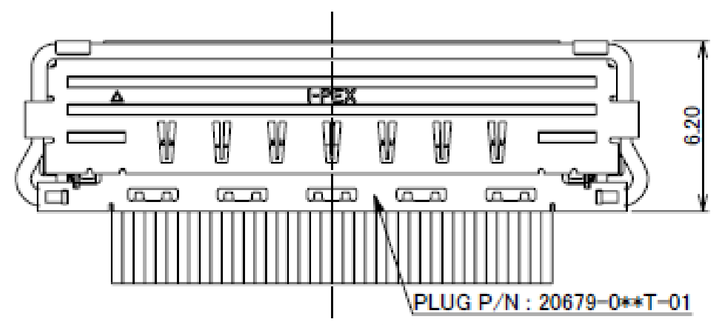

MATING CONDITION

NO.	DISCRIPTION	MATERIAL	FINISH , REMARKS
3	SHELL	PHOSPHOR BRONZE	ALL OVER Ni 1.00 μm MIN. SOLDERING AREA : Au 0.03 μm MIN.
2	CONTACT	PHOSPHOR BRONZE	ALL OVER Ni 1.00 μm MIN. CONTACT & SOLDERING AREA : Au 0.03 μm MIN.
1	HOUSING	LCP	UL94V-0 ,BLACK

Rev.17

PART NO.	Pos.	E	J	K	L
20682-020E-02	20	4.80	2.40	5.60	2.00
20682-030E-02	30	9.60	2.40	12.00	1.60
20682-040E-02	40	12.00	2.40	14.40	1.60
20682-050E-02	50	16.80	2.80	18.40	1.60

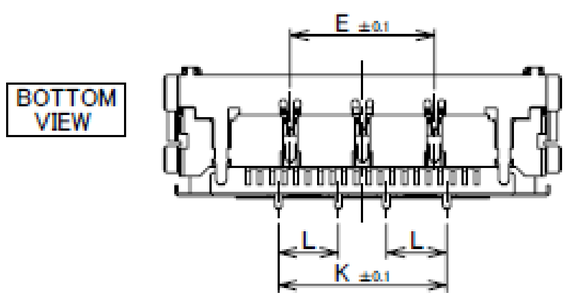

20P GROUND PITCH

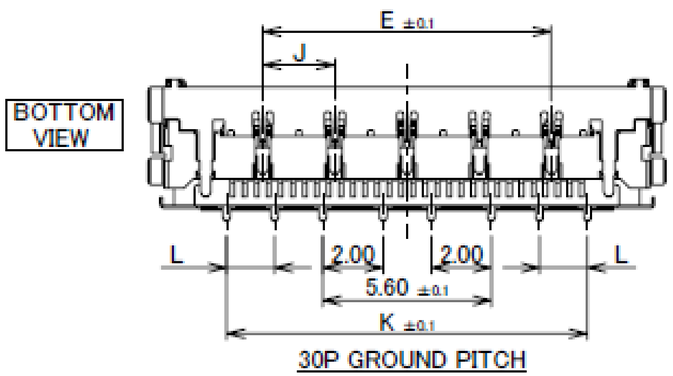

30P GROUND PITCH

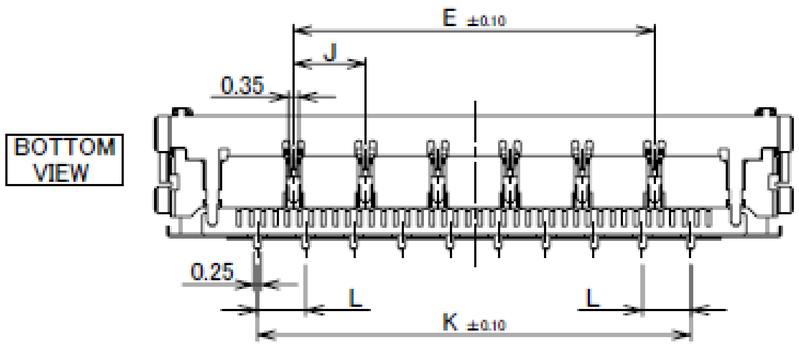

40P GROUND PITCH

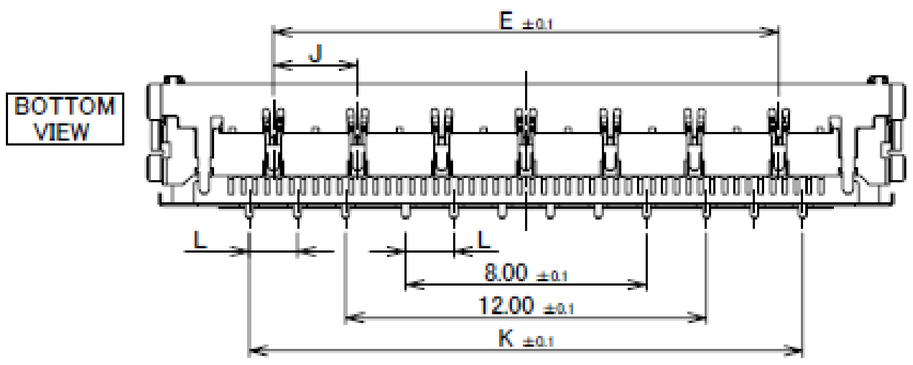

50P GROUND PITCH

Rev.17

Receptacle Assembly

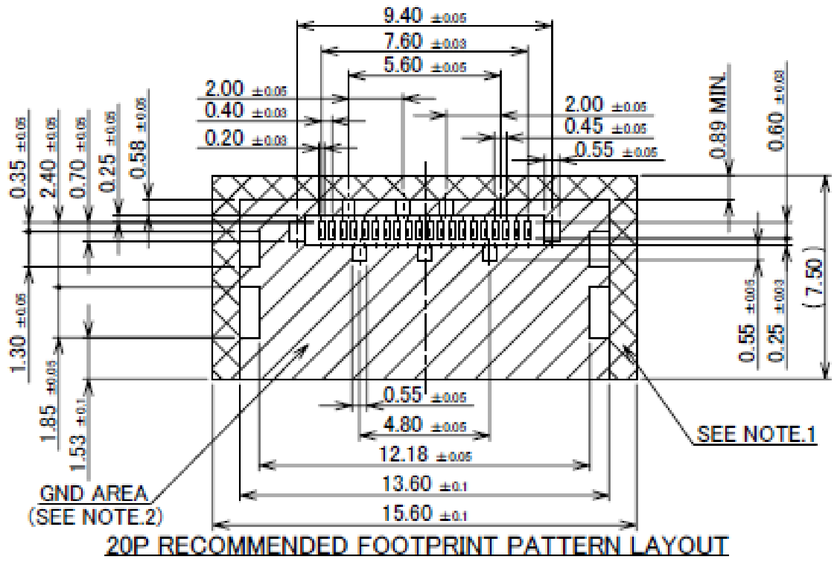

20P RECOMMENDED FOOTPRINT PATTERN LAYOUT

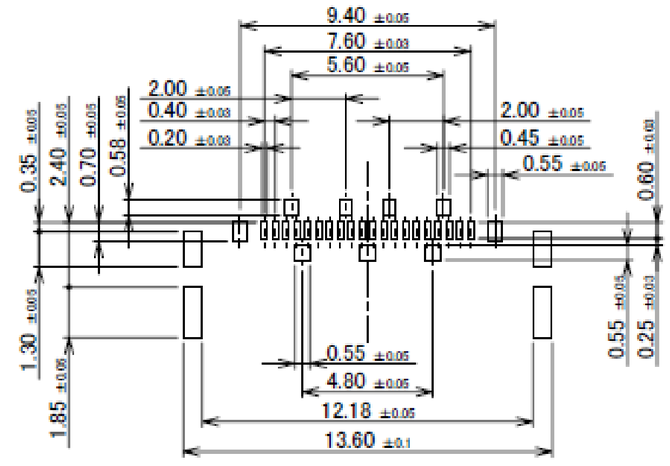

20P RECOMMENDED METAL MASK LAYOUT
METAL MASK THICKNESS : t=0.12mm

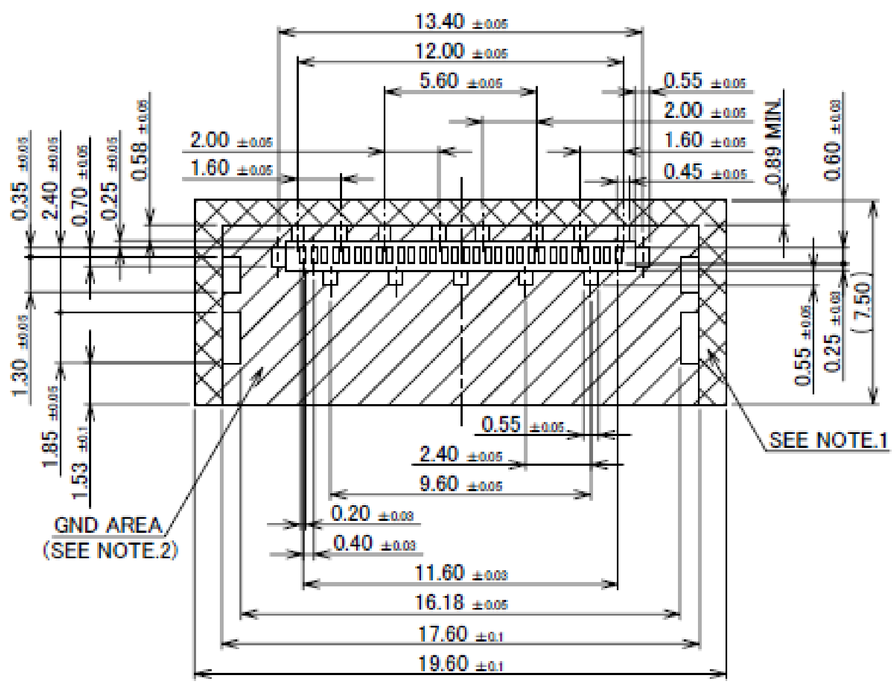

30P RECOMMENDED FOOTPRINT PATTERN LAYOUT

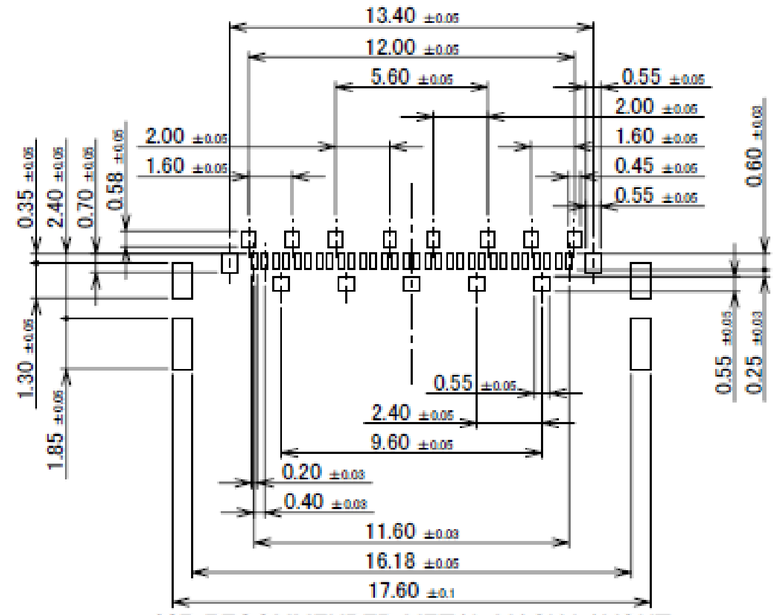

30P RECOMMENDED METAL MASK LAYOUT
METAL MASK THICKNESS : t=0.12mm

NOTES.
1. DO NOT MOUNT ANOTHER COMPONENT IN THIS AREA.
2. SOLDER RESIST MUST BE APPLIED TO THIS AREA.

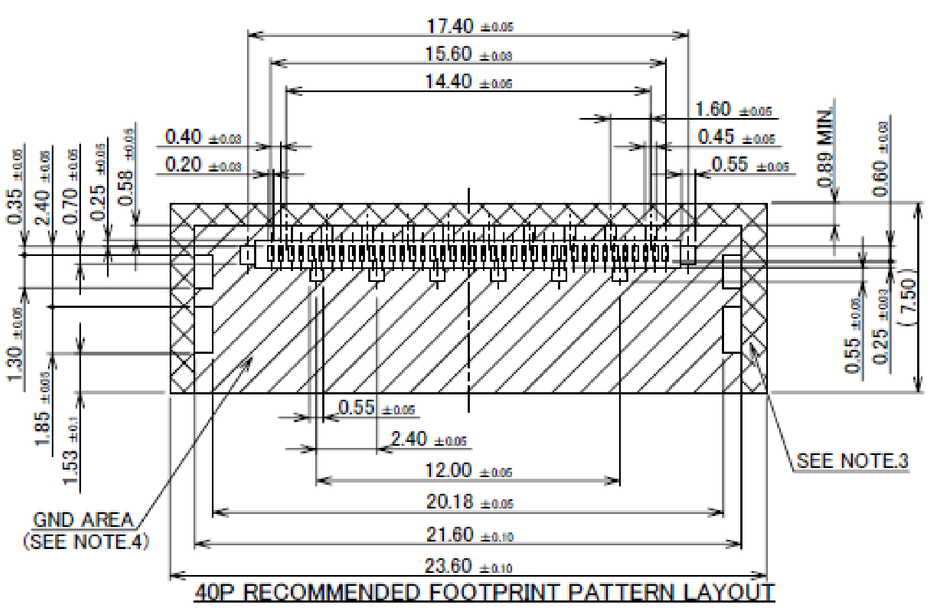

40P RECOMMENDED FOOTPRINT PATTERN LAYOUT

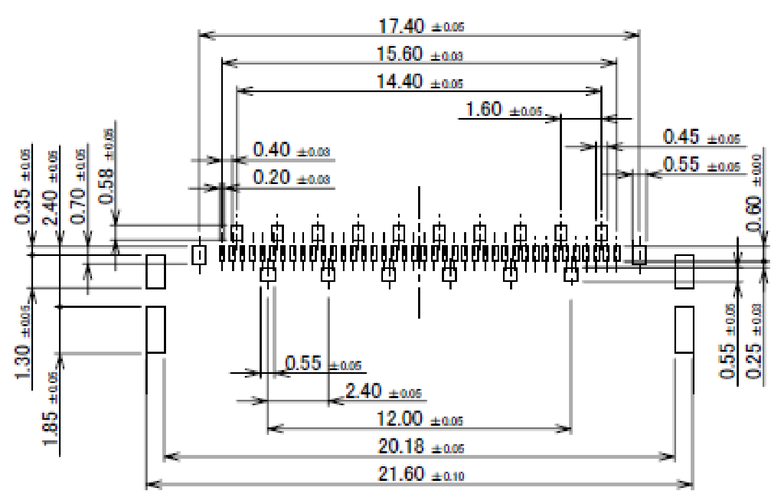

40P RECOMMENDED METAL MASK LAYOUT
METAL MASK THICKNESS : t=0.12mm

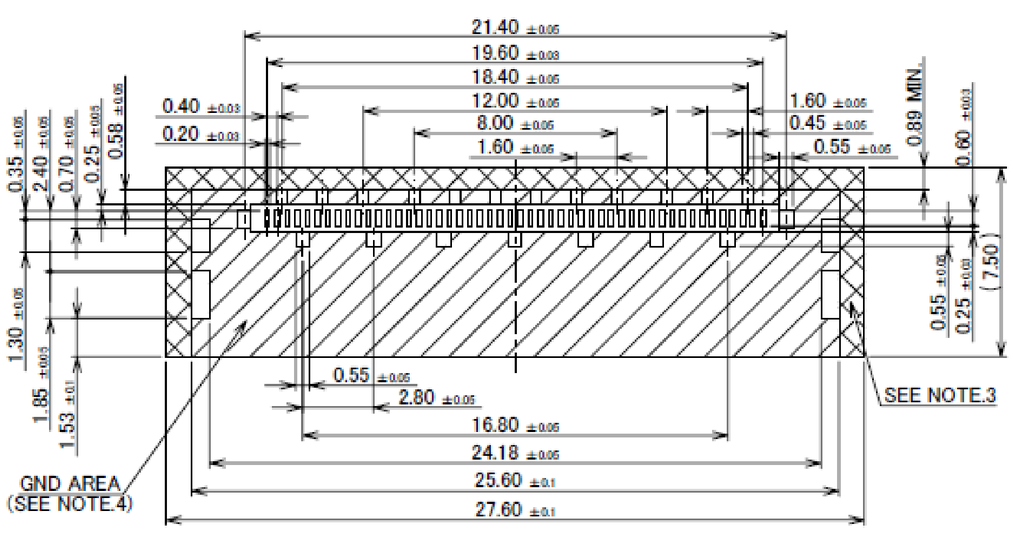

50P RECOMMENDED FOOTPRINT PATTERN LAYOUT

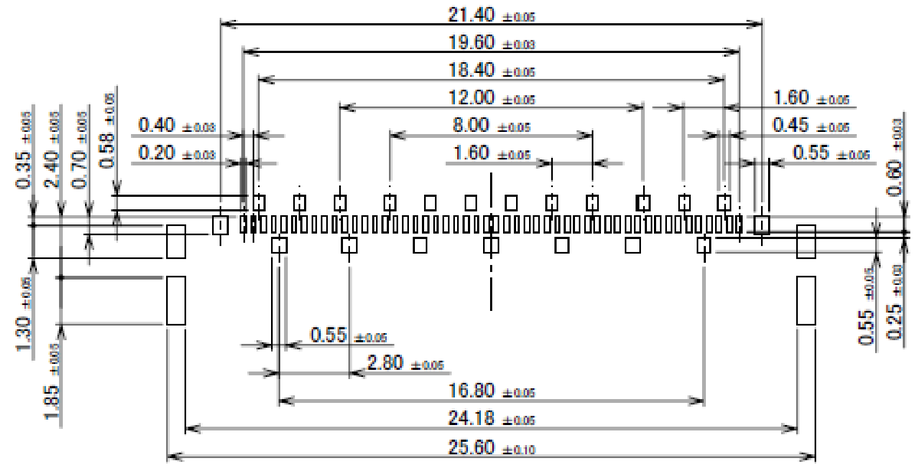

50P RECOMMENDED METAL MASK LAYOUT
METAL MASK THICKNESS : t=0.12mm

NOTES.
3. DO NOT MOUNT ANOTHER COMPONENT IN THIS AREA.
4. SOLDER RESIST MUST BE APPLIED TO THIS AREA.

Receptacle Assembly

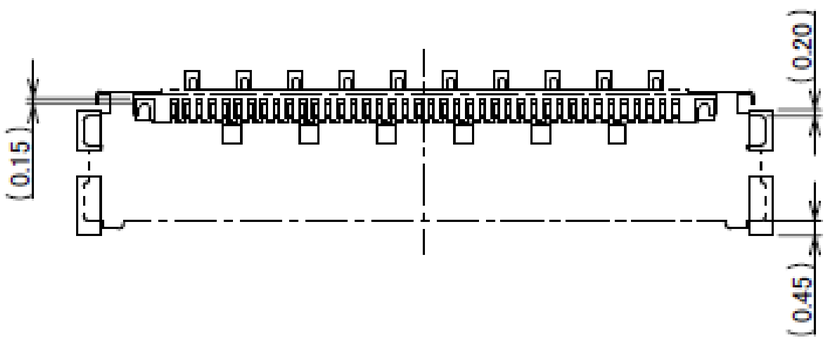

CONNECTOR ON RECOMMENDED FOOTPRINT PATTERN

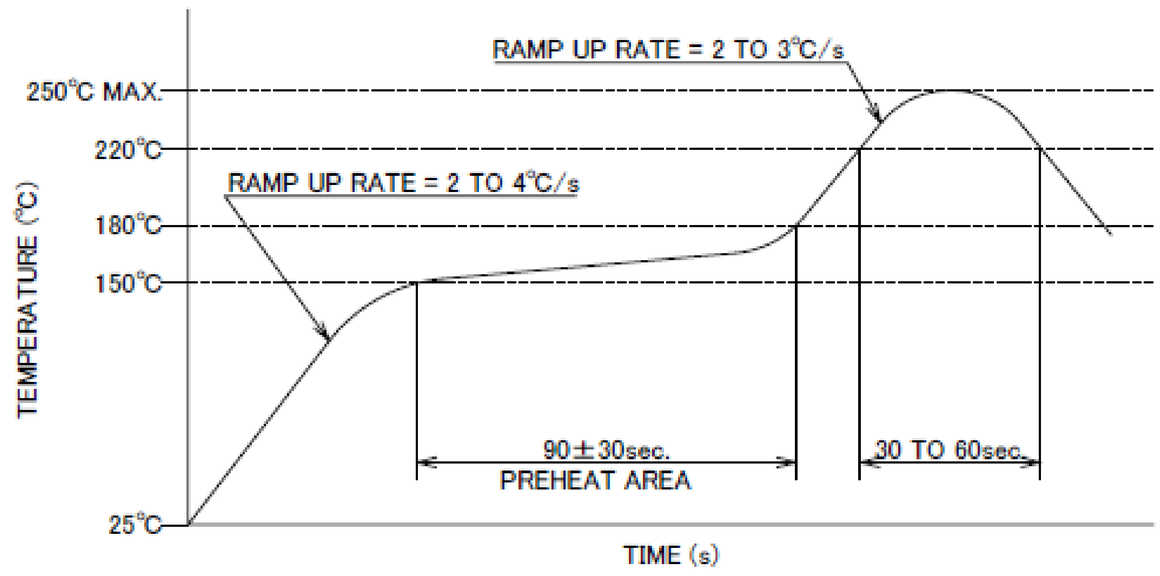

REFLOW TEMPERATURE PROFILE
SENJU METAL INDUSTRY CO., LTD. : M705-SHF(Sn96.5 Ag3.0 Cu0.5)

FOR CABLINE-CA II PLUG CABLE ASSEMBLY (DWG. NO. 20679)

ITEMS	SPECIFICATION
APPLICABLE CABLE	MICRO-COAXIAL : AWG #44 , 42 , 40 , 38 , 36 DISCRETE WIRE : AWG #36 , 34 TWINAXIAL CABLE : AWG #40 , 42
RATED VOLTAGE	100V AC (PER CONTACT PIN) ※THIS IS THE RATED VOLTAGE OF THE CONNECTOR. PLEASE NOTE THAT THE RATED VOLTAGE MAY VARY IN THE HARNESS DEPENDING ON THE CABLES USED.
RATED AMPERAGE (FOR CONTACT)	0.1A AC/DC [AWG #44] PER CONTACT PIN/UP TO 50 CONTACTS 0.24A AC/DC [AWG #42] PER CONTACT PIN/UP TO 50 CONTACTS 0.3A AC/DC [AWG #40] PER CONTACT PIN/UP TO 50 CONTACTS 0.5A AC/DC [AWG #38] PER CONTACT PIN/UP TO 18 CONTACTS 0.8A AC/DC [AWG #36] PER CONTACT PIN/UP TO 6 CONTACTS 1.0A AC/DC [AWG #34] PER CONTACT PIN/UP TO 6 CONTACTS ※TESTING BY A REAL MACHINE IS RECOMMENDED BECAUSE TEMPERTURE RISE MAY AFFECTED BY ACTUAL SITUATION.
OPERATING TEMPERATURE	233 TO 378K (-40℃ TO 105℃)
OPERATING HUMIDITY	85% MAX.
CONTACT RESISTANCE	INITIAL : 180mohm MAX.(AWG #34) / AFTER TEST : ⊿40mohm MAX. 275mohm MAX.(AWG #36) 360mohm MAX.(AWG #38) 600mohm MAX.(AWG #40) 700mohm MAX.(AWG #42) 1080mohm MAX.(AWG #44)
GROUND SHELL RESISTANCE	INITIAL : 50mohm MAX. / AFTER TEST : ⊿40mohm MAX.
INSULATION RESISTANCE	INITIAL : 1000Mohm MIN. / AFTER TEST : 500Mohm MIN.
DIELECTRIC WITHSTANDING VOLTAGE	AC250V 1min
DURABILITY	30 CYCLES
MATING FORCE (INITIAL / AFTER 30 CYCLES)	20P : 9.70N MAX. 30P : 14.55N MAX. 40P : 19.40N MAX. 50P : 24.25N MAX.
UN-MATING FORCE (INITIAL / AFTER 30 CYCLES)	20P : 2.0N MIN. 30P : 3.0N MIN. 40P : 4.0N MIN. 50P : 5.0N MIN.
CABLE RETENTION FORCE	20P : 9.80N MIN. 30P : 14.55N MIN. 40P : 19.40N MIN. 50P : 24.25N MIN.
COPLANARITY	0.10 MAX.
PRODUCT SPECIFICATION	PRS-2163
TEST REPORT	TR-15103
INSTRUCTION MANUAL	HIM-15033
PACKING STANDARD	PST-15027
APPEARANCE CRITERIA No.	QLS-A***

Custom Connectors Available

RF Connectors

MHF® series

Micro-Coaxial/Twinaxial Connectors

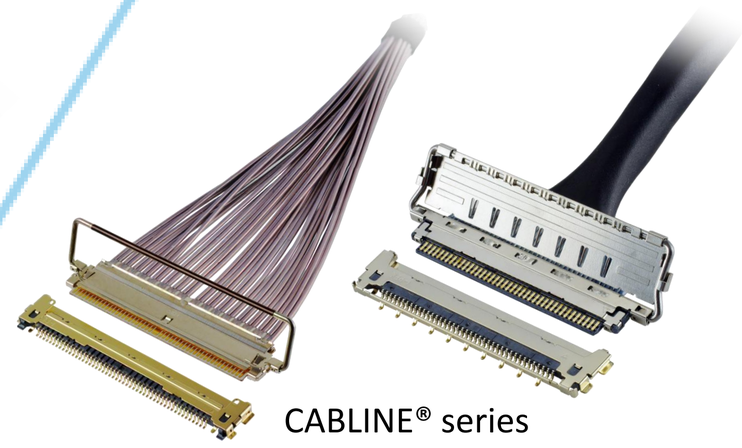

CABLINE® series

Wire-to-Board Connectors/ Terminals

AP series

ISH® series

Board-to-Board Connectors

NOVASTACK® series

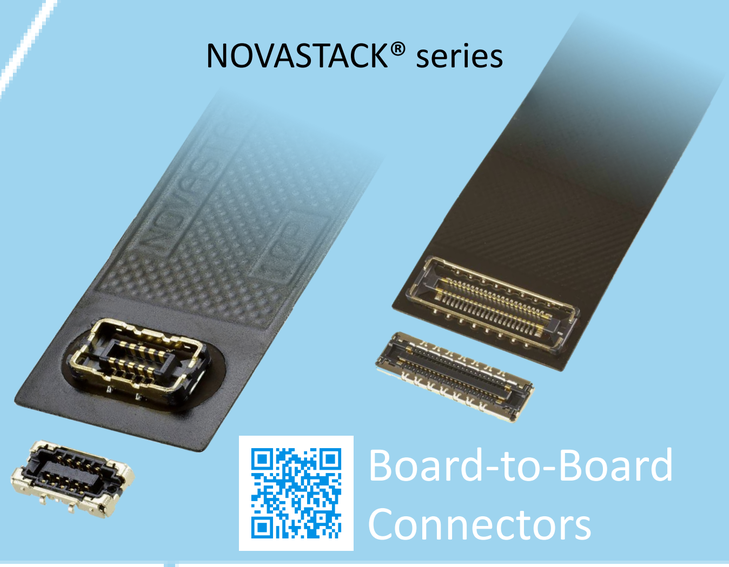

I/O Connectors

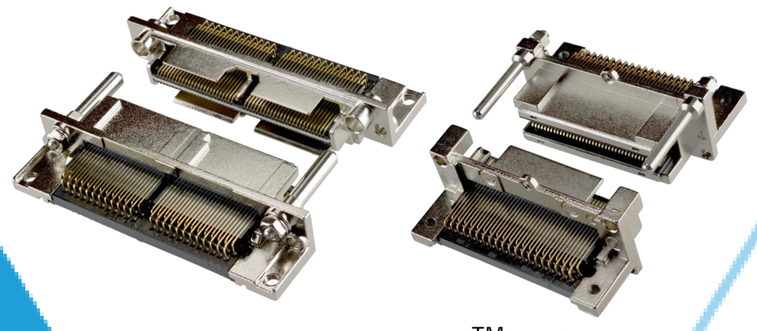

MINIDOCK™ series

FPC/FFC Connectors

MINIFLEX® series

EVAFLEX® series

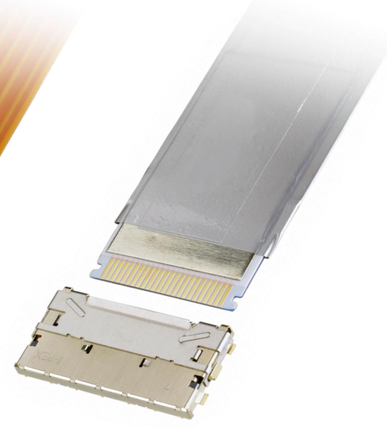

Inquiry

I-PEX, MHF, CABLINE, NOVASTACK, ISH, IARPB, MINIFLEX, EVAFLEX, MINIDOCK and ZenShield are registered trademarks of I-PEX Inc. Please note that the contents in the catalog might be changed without prior notification. I-PEX Inc. assumes no responsibility for any inaccuracies or obligation to update Information on these documents. Please be sure to read and understand the latest “Precautions for Use” and “Instruction Manual” before you use our products. We shall not be responsible for any defects, damages or troubles in case you use our products without following the precautions for use. Please feel free to contact our sales representatives when you use our products for any applications that require very high reliability and safety, or that relate to human life (ex. nuclear power control, aerospace, transportation, medical equipment, safety equipment etc.).

Contact your sales representative or more detailed information.

www.i-pex.com

I-PEX

© I-PEX Inc. 2025
All rights reserved